NEW ABSORPTION CHILLER AND CONTROL STRATEGY FOR THE SOLAR ASSISTED COOLING SYSTEM AT THE GERMAN FEDERAL ENVIRONMENT AGENCY

Jan Albers, Technische Universität Berlin, Institute of Energy Engineering, KT 2, Marchstraße 18, D-10587 Berlin, Germany, jan.albers@tu-berlin.de

Abstract: Typically the cooling capacity of absorption chillers is controlled by adjusting the driving hot water temperature according to the load. Meanwhile the cooling water temperature is controlled to a constant set value. In order to increase the solar cooling fraction and/or to decrease the operating costs of solar assisted cooling systems (SAC-systems) a new control strategy has been developed which controls hot and cooling water temperature simultaneously. Hereby the specific cost of cold – generated from solar or conventional heat – can be reduced. The basic concept of the strategy is explained and first results are shown for the SAC-system at the German Federal Environment Agency in Dessau. Here a recently developed absorption chiller is now used instead of a former adsorption chiller. With the new absorption chiller and the control strategy a seasonal energy efficiency ratio SEER above 0.75 is achieved. In addition the replacement of the adsorption chiller results in a 35% higher electric efficiency and a reduction of about 70% of the costs for spray water consumption in the reject heat device.

Key Words: Absorption Chiller, Adsorption Chiller, Monitoring, Control strategy, Cold Price

1 INTRODUCTION

The Federal Environment Agency is the scientific environmental authority that comes within the remit of the Federal Ministry of Environment, Nature Conservation and Reactor Safety (BMU). The main objectives of the agency are (see Umweltbundesamt (2006) for further information):

- to protect and nurture the natural basis for life now and for future generations,
- to promote sustainable development,
- to encourage everyone to consider environmental protection as a matter of course.

The Federal Environment Agency (UBA) relocated its main office from Berlin to Dessau in 2005. The architecturally unique headquarter of the Agency is located at a historic site in Dessau-Roßlau, the former ”Gas Quarter”. The number of employees here is approximately 750 (Umweltbundesamt 2006). The building itself is extremely well insulated. The energy demand is in between a low energy house and a passive house. The energetic requirements exceed those of the German Heat Protection Regulations by more than 50% and those of the Energy Conservation Regulations by some 40%. Mainly the heat demand for the building is supplied from a district heating network. The building ventilation system can be controlled separately for various areas. In order to reduce energy consumption, outside air is fed through a ground heat exchanger, one of the world’s largest. The pipes have a total length of 4800 meters and are used for pre-treatment of the air, which is heated in winter and cooled in summer. For certain ambient air conditions it is possible to bypass the ground heat exchanger.

Due to the ground heat exchanger the office rooms do not need any additional air conditioning. But for the high cooling loads of an IT-centre, teaching rooms and the lecture hall a solar-assisted cooling system has been designed. In addition electricity is supplied by a photovoltaic system integrated in the multi-pitched glass roof. Renewable energy sources (in the form of

solar power, solar heating and cooling as well as heat extracted from the ground) account for about 15% of the total energy demand (Umweltbundesamt 2006).

2 SOLAR COOLING CONCEPT

On first sight the cold demand of the Federal Environmental Agency seems to be unsuitable for solar cooling application, because it is relatively constant throughout the year and does not show up coherence with solar irradiation since it is dominated by the IT-centre. Therefore the basic idea of the cold supply concept was to use a hybrid dry/wet cooling tower in wintertime for direct cold supply in combination with a thermally driven chiller for summertime. Hereby a promising coherence of cold demand and available solar heat is re-established. During summertime the thermally driven chiller is powered either by district heat from a central CHP-plant in Dessau or by solar heat from a field of vacuum tube collectors (heat pipes, 216 m² absorber area, 3 x 7.5 m³ storage volume). A compression chiller is used for peak loads (e.g. at full occupation of the lecture hall) and as redundancy for the IT-centre. During wintertime the reject heat device is used directly for cold supply. In this case neither the compression chiller nor the thermally driven chiller is running (free cooling mode).

Due to a low supply temperature in the district heating network of Dessau (which is often below 75°C, e.g. in summertime) the decision was made to install an adsorption chiller in the beginning of the planning process. Using the experiences from a previous project (Wiemken and Henning 2005), an additional storage of 1 m³ size was installed in the hot water return flow from the chiller in order to dampen the temperature amplitude, which occurs during the heat recovery phase inside the adsorption chiller. Hereby a reliable operation of the system (with and without solar heating) was possible.

On the other hand the efficiency of the adsorption chiller was considerably lower as expected from manufacturer's data. In average the Nishiyodo adsorption chiller (type NAK-C 20) provided only about 60% of the expected cooling capacity and reached only about 70% of the expected coefficient of performance (COP). The low efficiency resulted in higher operating costs caused by an increased electricity and water consumption of the reject heat device in addition to the higher heat demand. Therefore, the adsorption chiller has been replaced in summer 2011 by a new H_2O/LiBr absorption chiller developed by the TU Berlin and ZAE Bayern (without any other change of the cold supply concept). This chiller was designed especially for district heating application and can be operated with driving temperatures below 65°C. Moreover a wet cooling tower is not necessary anymore (Petersen et al. 2011). Nevertheless, within the replacement project of the chiller at UBA the existing hybrid dry/wet cooling tower was retained and only the damping storage has been removed. The general control strategy for the whole SAC-system was kept unchanged.

2.1 System Control

Winter period (free cooling mode)
During wintertime the chiller is switched off and the cooling load is covered by free cooling operation of the heat rejection system. Consequently, there is no heat pump operation.

The heating demand is covered by district heating from a nearby CHP-plant mainly. During spring and autumn solar heating is also possible, if the temperature in the hot water tank is higher than the set value of the heating system. This set value depends on ambient temperature.

Summer period (chiller mode)
During summertime the heating system is switched off and the cold supply is performed mainly by the absorption chiller with peak load support from the electrical driven chiller. At nighttime the absorption chiller is normally driven by district heating. During day time the following control sequence is applied:

1) Starting the collector pump when global horizontal irradiation is higher than e.g. 200 W/m².
2) Switch on secondary solar pump, if collector outlet temperature is higher than the storage temperature in order to load the hot water storage tanks.
3) Switch off district heating and start with solar operation, when the storage temperature in first tank has reached the set value for driving the ad- or absorption chiller or is higher than the available temperature of the district heating system.
4) Solar operation is stopped, when the temperature in first storage tank is e.g. two degrees below the set value. After that, district heating is used until the next day.

2.2 Control strategy for the ad- and absorption chiller

The control strategy for the thermally driven chiller is independent of solar or district heating. In both cases the intention is to minimize the specific cost or the price p_{cold} for the generation of cold E_E. In general the strategy can be applied to any thermally driven cooling process, but has been explained first for the solar driven adsorption chiller at the Federal Environment Agency (Albers et al. 2009).

The price for cold is the ratio of operating costs C_{op} and generated cold E_E during a certain time period.

$$p_{cold} = \frac{C_{op}}{E_E} = \frac{\int \dot{Q}_D \cdot p_{th}\, d\tau + \int P_{el} \cdot p_{el}\, d\tau + \int \dot{M}_{mat} \cdot p_{mat}\, d\tau}{\int \dot{Q}_E\, d\tau} \approx \frac{\dot{Q}_D \cdot p_{th} + P_{el} \cdot p_{AC}}{\dot{Q}_E} = p_{cold,\,th} + p_{cold,\,el} \qquad (1)$$

Here $\dot{Q}_E$ is the cooling capacity, $\dot{Q}_D$ the necessary heat flow to drive the chiller and P_{el} the necessary electricity (e.g. for the fans in any reject heat device) to reject the heat $\dot{Q}_{AC} = \dot{Q}_D + \dot{Q}_E$ from condenser and absorber to the environment. If a wet cooling tower is used an additional mass flow (e.g. water, chemicals etc.) may be necessary. Prices of thermal energy p_{th}, electricity p_{el} and of utilized material p_{mat} are applied to monetize these efforts. To derive the total price for cold generation in a certain moment, the specific costs of all input values have been divided by the load, which is assumed to be equal to the actual cooling capacity $\dot{Q}_E$ of the chiller.

For the basic concept of the control strategy some simplifications will be used:
- No electrical back-up system is considered.
- Electricity demand for supply pumps is neglected.
- Storage effects are neglected, i.e. quasi-steady state operation is assumed.
- Non-energetic or material input values are assumed to be proportional to the power P_{el} of the cooling tower. They are considered by a constant mixed price $p_{AC} = f(p_{el}, p_{mat})$ = const.

With these simplifications the right hand side of equation (1) is valid and might be re-written as

$$p_{cold} = p_{cold,th} + p_{cold,el} = \frac{p_{th}}{COP_{AKA}} + \frac{p_{AC}}{COP_{el}} \qquad (2)$$

The total price for cold depends on the coefficients of performance (COP) which describes the part load behavior of chiller and reject heat device (RKW), in combination with the prices for materials as well as electrical and thermal energy.

For SAC-systems the price of thermal energy is also a mixed price. It can be derived from the price for back-up heat (e.g. district heat, gas consumption etc.) and the specific capital costs for the solar collector field p_{sol}. Thus it depends on the solar fraction D_{sol}. Without solar (i.e. $D_{sol} = 0$) the thermal price p_{th} equals the price for conventional back-up heat p_{conv}.

$$p_{th} = p_{sol} \cdot D_{sol} + p_{conv} \cdot (1 - D_{sol}) \quad (3)$$

The part load behavior of an absorption chiller can be described by the method of characteristic equations. It has been shown in Ziegler et al. (1999) that the cooling capacity is approximately a linear function of a so called characteristic temperatures difference $\Delta\Delta t$. This temperature difference combines the mean temperatures t_X (where X=D, A, C, E holds for Desorber, Absorber, Condenser and Evaporator of the chiller) with a constant Dühring parameter B. The Dühring parameter gives the slope of a mean sorbens isostere in a Dühring chart where the boiling temperature of the sorbens is plotted with respect to the dew point of pure refrigerant.

$$\Delta\Delta t = t_D - t_A - B \cdot (t_C - t_E) \quad (4)$$

A characteristic straight line for the cooling capacity of adsorption chillers is available also, if a modified characteristic temperature difference $\Delta\Delta t^*$ is used with inlet and outlet temperatures (instead of mean temperatures) in combination with a pseudo Dühring parameter B* (see label of x-axis in Figure 1). In contrast to B the parameter B* includes not only the boiling property data but also some information about the thermodynamic losses of the process. In Albers (2012) the determination of pseudo Dühring parameters B* for single stage cycles is described more in detail.

According to the characteristic equation

$$\dot{Q}_E = s_E \cdot \Delta\Delta t^* + r_E \quad (5)$$

the load condition (fixed by $\dot{Q}_E = \dot{Q}_{E,wanted}$ and $t_{Eo} = t_{Eo,set}$) can be matched by an arbitrary value of either t_{Di} or t_{ACi} (as long as both are inside the allowed operation interval). The only restriction for the remaining temperature is that it has to yield a certain $\Delta\Delta t^*_{set}$ which is determined by the demand $\dot{Q}_E = \dot{Q}_{E,wanted}$ and the part load behavior of the chiller (i.e. the characteristic equation). This degree of freedom in one temperature can be used to minimize the operating costs in any thermally driven chiller or heat pump.

For example it is seen from Figure 1 that the driving heat flow $\dot{Q}_D$ of the former adsorption chiller can be described by a characteristic equation also. But when plotted against the modified characteristic temperature, especially the loss parameter r_D shows up to be variable and not constant. This means that the necessary driving heat for a certain cooling capacity of e.g. 30 kW varies at fixed chilled water outlet temperature $t_{Eo,set}$ = 10°C as a function of driving and cooling water inlet temperature (in Figure 1 between approx. 80 and 90 kW). This variation of the loss parameter can be explained and described by an improved method of characteristic equations, which does not assume constant thermodynamic losses anymore, see Albers and Ziegler (2009), Albers and Ziegler (2011), and Albers (2012) for further information.

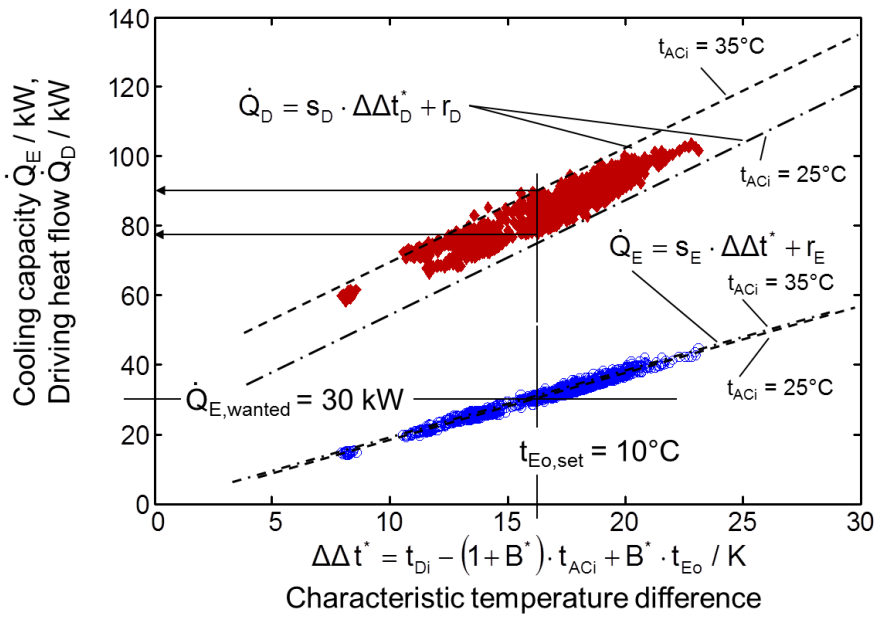

Figure 1: Characteristic lines and measured data of the adsorption chiller Nishiyodo NAK-020 at the German Federal Environment Agency

In the improved method of characteristic equations the loss parameters r_E and r_D are derived as explicit functions of the external inlet temperatures and the heat permeability (i.e. the UA-value) of each heat exchanger in the chiller.

$$\dot{Q}_E = s_E \cdot \Delta\Delta t^* + r_E(t_{Di}, t_{ACi}) . \tag{5}$$

$$\dot{Q}_D = s_D \cdot \Delta\Delta t^* + r_D(t_{Di}, t_{ACi}) . \tag{6}$$

From the energy balance of the chiller the reject heat flow can be described by the sum of these two equations, i.e. $\dot{Q}_{AC} = -(\dot{Q}_D + \dot{Q}_E)$. Moreover the outlet air temperature of the RKW $t_{air,out}$ is determined by the heat transfer effectiveness Θ_{air} and a ratio R'_{air} of air properties $(c_p \cdot \rho)_{air}$ with respect to the heat capacity flow rate of cooling water, $\dot{W}_{AC}$. Consequently, for a fixed load condition the power of the fans in a dry cooler is also a function of t_{Di} and t_{ACi} only.

$$P_{el} = e_{fric} \cdot \dot{V}_{air}^3 = e_{fric} \cdot \left(\frac{\dot{Q}_{AC}}{c_{p,air} \cdot \rho_{air} \cdot (t_{air,in} - t_{air,out})} \right)^3 = \left(\frac{\dot{Q}_{AC} \cdot \sqrt[3]{e_{fric}}}{R'_{air} \cdot \Theta_{air} \cdot [\dot{Q}_{AC} + \dot{W}_{AC} \cdot (t_{air,in} - t_{ACi})]} \right)^3 \tag{7}$$

Inserting the characteristic equations of the chiller (5) and (6) and of the dry air cooler (7) into equation (1) the price for cold generation can be derived as function of driving and cooling water inlet temperature (t_{Di} and t_{ACi}).

$$p_{cold} = \overbrace{\frac{\dot{Q}_D(t_{Di}, t_{ACi})}{\dot{Q}_E(t_{Di}, t_{ACi})} \cdot p_{th}}^{\text{thermal price}} + \overbrace{\frac{P_{el}(t_{Di}, t_{ACi})}{\dot{Q}_E(t_{Di}, t_{ACi})} \cdot p_{AC}}^{\text{electrical price}} = p_{cold,th}(t_{Di}, t_{ACi}) + p_{cold,el}(t_{Di}, t_{ACi}) \tag{8}$$

But only one of these temperatures is independent (t_{Di} is used here) because the other one (here t_{ACi}) is fixed by the required characteristic temperature difference or load, respectively.

$$t_{ACi} = \frac{1}{(1+B^*)} \cdot (t_{Di} - B \cdot t_{Eo,set} - \Delta\Delta t^*_{set}) = \frac{1}{(1+B^*)} \cdot (t_{Di} - B \cdot t_{Eo,set} - \frac{\dot{Q}_{E,wanted} - r_E}{s_E}) \quad (9)$$

To achieve a minimum price, the first derivative of equation (8) has to become zero, i.e.

$$\frac{dp_{cold}}{dt_{Di}} = 0 = \frac{dp_{cold,th}(t_{Di})}{dt_{Di}} + \frac{dp_{cold,el}(t_{Di})}{dt_{Di}} \quad . \quad (10)$$

This additional equation takes up the degree of freedom and determines the combination of $t_{Di} = t_{Di,opt}$ and $t_{ACi} = t_{ACi,opt}$ which gives the minimum total cold price p_{cold}. Consequently neither t_{Di} nor t_{ACi} are free to choose anymore. Both have to be adjusted to distinct values ($t_{Di,opt}/t_{ACi,opt}$) where the load $\dot{Q}_E$ is matched and at the same time the minimum price condition is fulfilled.

In Figure 2 the development of the total cold price p_{cold} is shown schematically as function of hot water inlet temperature t_{Di} together with the fractions $p_{cold,th}$ and $p_{cold,el}$ for given load and ambient conditions ($\dot{Q}_E$, t_{Eo}, and t_{amb}). Hence, these values can be used as constants in the derivative (10). With increasing driving temperature t_{Di} the cooling water temperature also increases (otherwise the cooling capacity or chilled water temperature would change). In addition the thermal price for cold $p_{cold,th}$ is increasing. This is a consequence of the increasing irreversibility in the sorption chiller (i.e. increasing $\dot{Q}_D$ for the same load $\dot{Q}_E$). Consequently the reject heat flow $\dot{Q}_{AC}$ is increased also. Nevertheless the specific electricity costs $p_{cold,el}$ are decreasing due to an increasing cooling water temperature t_{ACi}, which results in a higher driving temperature difference in the dry air cooler (since t_{amb} is constant).

It has to be mentioned that the location and the value of the minimum price depends not only on the governing technical variables (such as s_X, e_{fric}, Θ_{air} etc.) or economic variables, such as first costs and energy prices (p_{th}, p_{el} etc.), but also on the current load and ambient condition ($\dot{Q}_{E,wanted}$, $t_{Eo,set}$, t_{amb}). Consequently, both temperatures t_{Di} and t_{ACi} have to be controlled simultaneously to set values $t_{Di,set} = t_{Di,opt}$ and $t_{ACi,set} = t_{ACi,opt}$ at any time the chiller is in operation.

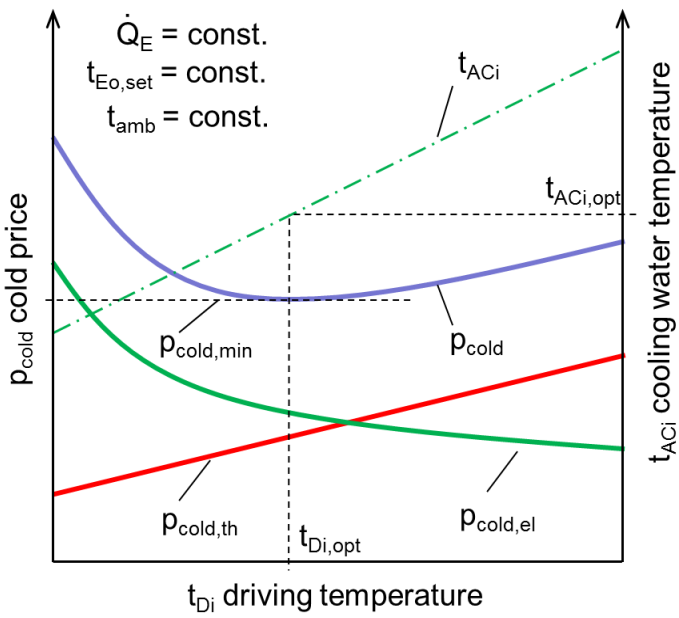

Figure 2: Hot and cooling water temperatures for a minimum cold price

3 MONITORING CONCEPT

The SAC-system at the Federal Environment Agency was monitored from the beginning of operation. The data acquisition is in full operation since August 2005. In addition to the conventional plant management system, for the control of pumps, valves, flaps etc. mainly heat flow meters have been installed for monitoring (see Figure 3). The aim was to achieve complete energy balance for all hot, chilled and cooling water circuits especially for the thermally driven chiller.

The temperature probes for heat flow measurements are paired and calibrated Pt-100 sensors. Together with ultrasonic or magnetic inductive flow meters they are connected to heat-meters, where the heat flow is calculated according to the implemented property data. Standard signals of 4-20 mA are provided by the heat-meters for the values of

- t_{Xc} cold flow temperature in °C
- t_{Xh} hot flow temperature in °C
- $\dot{V}_X$ volume flow rate in m³/h
- $\dot{Q}_X$ heat flow in kW

where X holds for the positions of the heat flow meter (e.g. X = K = solar collector, see Figure 3). In addition to t_{Xh} and t_{Xc} inlet and outlet temperatures t_{Xi} and t_{Xo} are measured by NTC-sensors in parallel. They have a lower accuracy, since they are used only by the plant management system to operate the HVAC units, chillers etc. but not to calculate heat balances. For the acquisition of global horizontal solar irradiation a pyranometer (WMO secondary standard) has been installed on the roof. Electricity consumption is measured by smart electric meters, which also provide the power P in some positions. All data can be visualized on a PC-monitor and a SQL data base is generated in a 1-minute time interval, which is used for data evaluation.

4 RESULTS

The control strategy has been adapted from the adsorption chiller to the absorption chiller just by implementing new slope and loss parameters of the characteristic equations (i.e. s_X and r_X) into the control system. Figure 4 shows a typical summer day in 2012 with a daily sum of global horizontal irradiation q_{gh} = 6.4 kWh/m² and a mean ambient temperature of t_{amb} = 19°C (min/max: 13/25°C).

According to the load and the available supply temperature (from solar heating t_{PSh} or district heating t_{FWh}) the driving and cooling water temperature of the chiller is controlled simultaneously in a range of 55°C < t_{Di} < 75°C and 20°C < t_{ACi} < 28°C, respectively. In contrast the chilled water outlet temperature t_{Eo} is relatively constant and close to the set value.

Due to a high storage temperature t_{PS11}, from the previous day, solar operation is ongoing until 5 a.m. When the storage tank temperature t_{PS11} is not high enough anymore and below the district heating supply temperature t_{FWh}, the solar operation is stopped. It is re-started at 11:30 a.m. where t_{PS11} is sufficiently high enough anew. In the very beginning around 11:30 a.m. the solar supply temperature t_{PSh} is considerably lower as t_{PS11} because of heat losses in the pipe section between solar heat storage and chiller. Thus, for a short moment the available supply temperature is lower than the necessary one to match the load (i.e. $t_{PSh} < t_{Di,opt}$). The lag of heating capacity is balanced by a lower set value for the cooling water (i.e. $t_{ACi,set} < t_{ACi,opt}$). Thus the RKW can be used for back-up purposes also. Since the deviation between $t_{Di,opt}$ and t_{PSh} is large during this switching phase, $t_{ACi,set}$ is calculated so low that the humidifier of the hybrid dry/wet cooling tower is switched on for a moment ($\gamma_{wet} > 0$). This happened again at approximately 8 p.m. where the solar operation was stopped for a short moment after the primary collector pump was switched off. In turn this is a complex effect of hydraulics and heat losses during idle periods in the hot water circuit.

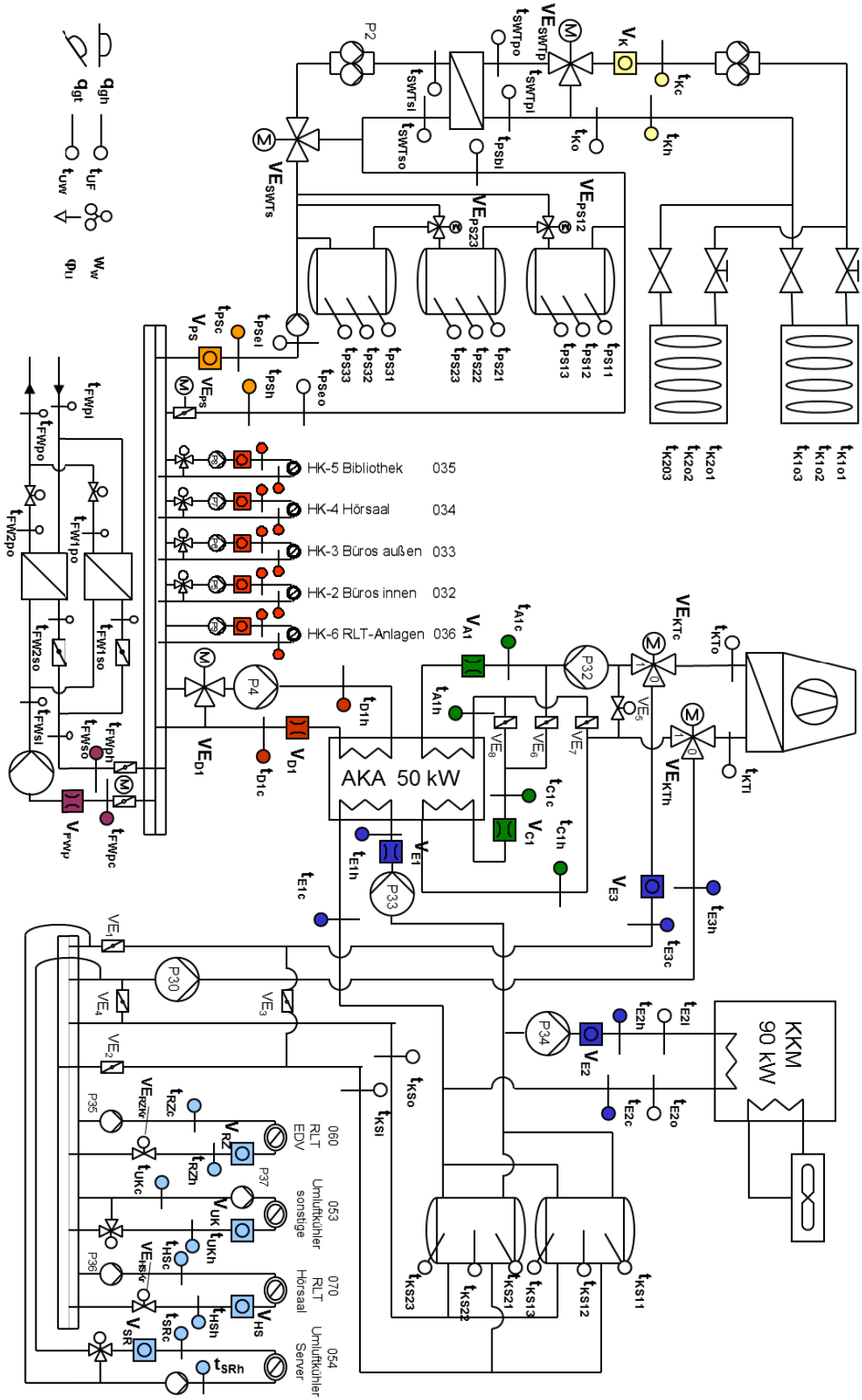

Figure 3: Monitoring scheme for the SAC-system at the Federal Environment Agency in Dessau

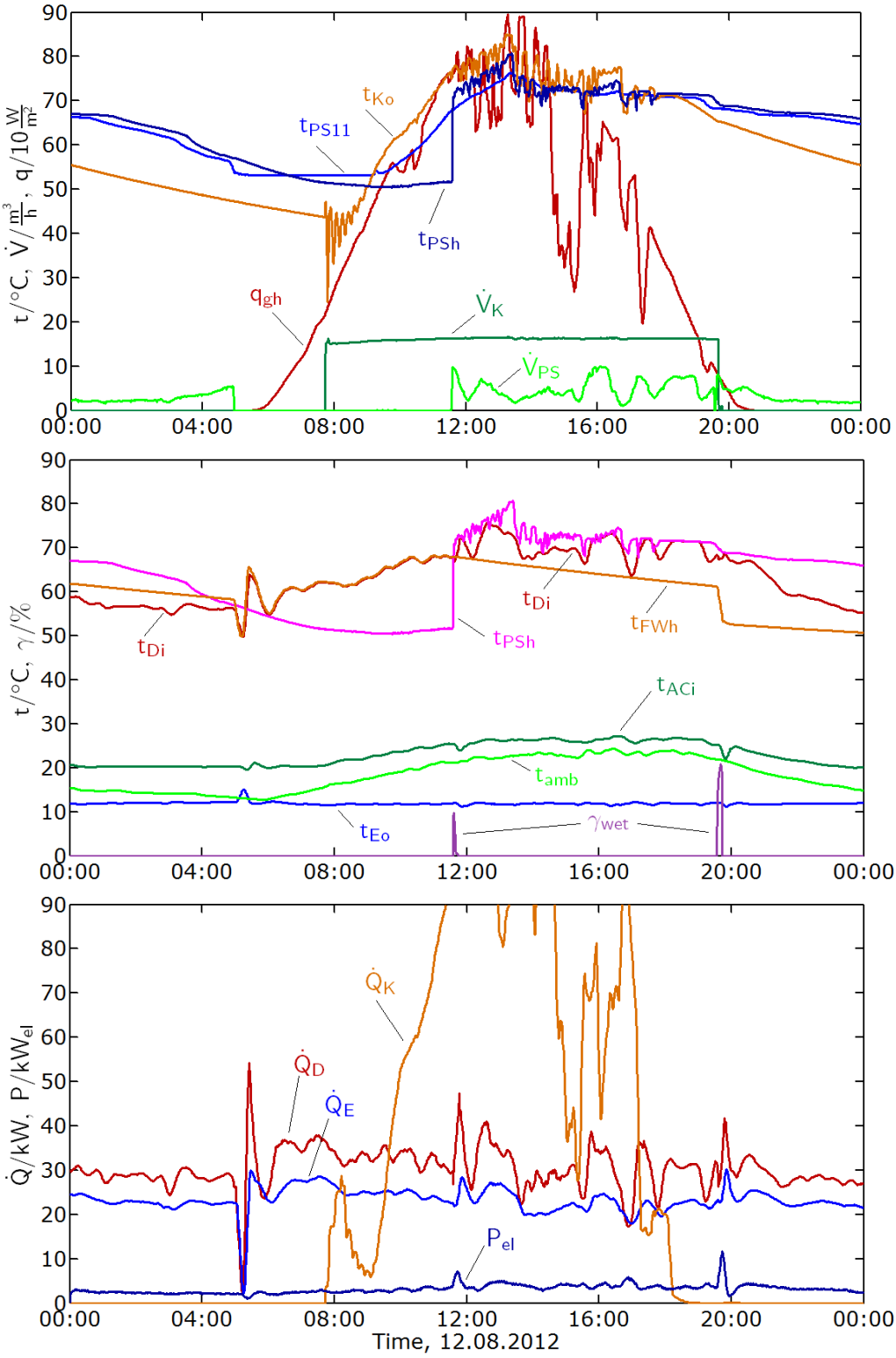

Figure 4: Monitoring Data of new absorption chiller and improved control strategy

At higher ambient temperatures the humidifier was also operated continuously in order to match the optimum cooling water temperature. Nevertheless the spray water consumption has been reduced considerably without any change of the humidifier control itself. Especially during months with moderate ambient temperatures the reduction due to the new absorption chiller in combination with variable cooling water temperatures is large (see Figure 5).

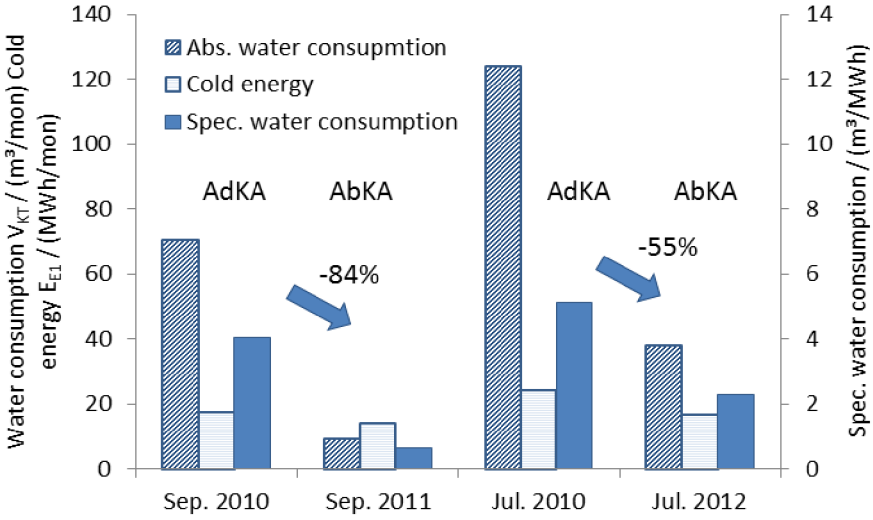

Figure 5: Reduction of water consumption for the hybrid dry/wet cooler (AdKA=adsorption chiller, AbKA=absorption chiller)

The operation of the new absorption chiller started in July 2011. Thus, for a summarizing evaluation of the chiller replacement the operating data of the first year (i.e. from 01.08.2011 to 31.07.2012) are used. Unfortunately a frost damage occurred inside the hybrid dry/wet cooling tower during a very cold time period in February 2012, where t_{amb} < -18°C. As a consequence thermally driven cooling was not possible until mid of June 2012 and the total amount of generated cold from the new absorption chiller is significantly lower as in the previous year (upper part in Table 1).

Tab. 1: Evaluation of operating data after chiller replacement

	Previous year with adsorption chiller Aug. 2010 – Jul. 2011	First year with new absorption chiller Aug. 2011 – Jul. 2012	Change
Cold generation	104 MWh_0	59 MWh_0	
Driving heat	221 MWh_{th}	80 MWh_{th}	
Thermal efficiency	0,47 MWh_0/MWh_{th}	0,76 MWh_0/MWh_{th}	+62%
Electrical efficiency	2,3 MWh_0/MWh_{el}	3,1 MWh_0/MWh_{el}	+35%
Water consumption	4,0 m^3/MWh_0	1,3 m^3/MWh_0	–68%

Nevertheless the specific data in Table 1 show that the seasonal thermal efficiency of the absorption chiller is remarkably higher in comparison to the former adsorption chiller. In addition the electrical efficiency has been improved by approx. 35%. But as seen from Table 2 the total specific electricity demand for (solar) thermal cold generation is still in the same range as for the compression chiller.

This has two reasons: On the one hand side, free cooling operation with a low electricity consumption of e_{RKW} < 0.05 – 0.1 as in the previous years was not possible during the breakdown period of the reject heat device. On the other hand the relatively high specific electricity demand for thermally driven cooling during June and July due to high ambient temperatures is not balanced by the lower values which could have been achieved in spring 2012. Therefore a further reduction in specific electricity consumption is expected for the following period.

Tab. 2: Specific electricity demand with absorption chiller

Electricity consumer		kWh_{el}/kWh_0
Reject heat device	e_{RKW}	0,17
Chilled & cooling water p.	e_{P32+33}	0,09
Hot water pump	e_{P4}	0,01
Pumps in solar circuits	e_{P1+2}	0,05
Compression chiller	e_{KKM}	0,29

5 CONCLUSIONS

The replacement of an adsorption chiller by a new developed absorption chiller at the German Federal Energy Agency in Dessau has increased the energy and cost efficiency considerably. In addition a control strategy with simultaneously controlled hot and cooling water temperature has been implemented successfully. Despite of variable driving temperatures from the solar collector field and limited supply temperatures in the district heating network during summer-time, the chilled water outlet temperature was kept sufficiently constant. A lower cooling water set value for the reject heat device is used for this purpose if necessary. As a consequence the optimum temperature combination of hot and cooling water could not be reached continuously under these conditions. Nevertheless the advanced control algorithm tracked the chiller in the direction of minimum costs as far as possible. But due to the increasing electricity demand with decreasing cooling water temperature the possibility of primary energy savings with the SAC-system is limited under the economic constraint of minimum price. Therefore future work will concentrate on a higher overall electrical efficiency – especially of the hybrid dry/wet reject heat device. On the other hand the economic optimum temperature combination is not expected to be the same as necessary for maximum primary energy savings. Consequently an objective function has to be included which combines both goals.

6 ACKNOWLEDGEMENT

The investigation was carried out with financial support from German Ministry for Economics and Technology (BMWi-Project 0327460B) and Federal Energy Agency (FKZ 363 01 222).

7 REFERENCES

Albers J., H. Kemmer, F. Ziegler 2009. “Solar-driven adsorption chiller controlled by hot and cooling water temperature”, *Proc. 3rd Int. Conf. Solar Air-Conditioning*, Palermo, Italy, pp. 338-343.

Albers J., F. Ziegler 2009. “Influence of internal irreversibilities on the characteristic equation of absorption chillers”, *Proc. Heat Powered Cycles Conference*, Berlin, Germany, paper 420.

Albers J., F. Ziegler 2011. “Heat transfer calculation for absorption heat pumps under variable flow rate conditions”, *Proc. Int. Sorption Heat Pump Conf*, Padua, Italy, pp. 813-822.

Albers J. 2012. “Improvement of a calculation method for the control of absorption chillers”, PhD-thesis in German, Technische Universität Berlin, Fakultät III Prozesswissenschaften, Institut für Energietechnik, to be published.

Petersen S., A. Hansske, C. Hennrich, W. Hüls, J. Stangl, M. Mittermaier, M. Helm, P. Zachmeier, S. Natzer, W. Lanser, F. Ziegler 2011. “Development of a 50 kW absorption chiller”, *Proc. 23rd Int. Conf. of Refrigeration*, Prague, Czech Republic.

Umweltbundesamt (Ed. Möcker V.) 2006. Federal Environment Agency – For people and the environment, Umweltbundesamt Dessau, Germany.

Wiemken E., H.-M. Henning 2005. “Solar assisted cooling at the University Hospital Klinikum Freiburg”, *Proc. Int. Conf. Solar Air-Conditioning*, Staffelstein, Germany, pp.178-182.

Ziegler F., C. Schweigler, H.-M. Hellmann 1999. “The characteristic equation of sorption chillers”, *Proc. Int. Sorption Heat Pump Conf.*, Munich, Germany, pp. 169-172.

Part of

Thermally driven heat pumps for heating and cooling. – Ed.: Annett Kühn – Berlin: Universitätsverlag der TU Berlin, 2013

ISBN 978-3-7983-2686-6 (print)
ISBN 978-3-7983-2596-8 (online)

urn:nbn:de:kobv:83-opus4-39458
[http://nbn-resolving.de/urn:nbn:de:kobv:83-opus4-39458]